SEMICONDUCTOR

DATA SHEET

YS2N3904

TRANSISTOR (NPN)

Pb

FEATURE

- NPN silicon epitaxial planar transistor for switching and Amplifier applications
- As complementary type, the PNP transistor 2N3906 is Recommended
- This transistor is also available in the SOT-23 case with the type designation MMBT3904

TO-92

1. EMITTER
2. BASE
3. COLLECTOR

MAXIMUM RATINGS (T_A=25℃ unless otherwise noted)

Symbol	Parameter	Value	Units
V_{CBO}	Collector-Base Voltage	60	V
V_{CEO}	Collector-Emitter Voltage	40	V
V_{EBO}	Emitter-Base Voltage	6	V
I_C	Collector Current -Continuous	0.2	A
P_C	Collector Power Dissipation	0.625	W
T_J	Junction Temperature	150	℃
T_{stg}	Storage Temperature	-55-150	℃

ELECTRICAL CHARACTERISTICS (Tamb=25℃ unless otherwise specified)

Parameter	Symbol	Test conditions	MIN	TYP	MAX	UNIT
Collector-base breakdown voltage	$V_{(BR)CBO}$	I_C=10μA, I_E=0	60			V
Collector-emitter breakdown voltage	$V_{(BR)CEO}$	I_C= 1mA , I_B=0	40			V
Emitter-base breakdown voltage	$V_{(BR)EBO}$	I_E= 10μA, I_C=0	6			V
Collector cut-off current	I_{CBO}	V_{CB}=60V, I_E=0			0.1	μA
Collector cut-off current	I_{CEO}	V_{CE}= 40V, I_B=0			0.1	μA
Emitter cut-off current	I_{EBO}	V_{EB}= 5V, I_C=0			0.1	μA
DC current gain	h_{FE1}	V_{CE}=1V, I_C=10mA	100		400	
	h_{FE2}	V_{CE}=1V, I_C=50mA	60			
	h_{FE3}	V_{CE}=1V, I_C=100mA	30			
Collector-emitter saturation voltage	$V_{CE(sat)}$	I_C=50mA, I_B=5mA			0.3	V
Base-emitter saturation voltage	$V_{BE(sat)}$	I_C=50mA, I_B=5mA			0.95	V
Transition frequency	f_T	V_{CE}=20V,I_C=10mA,f=100MHz	300			MH_Z
Delay Time	t_d	V_{CC}=3V,V_{BE}=0.5V,			35	ns
Rise Time	t_r	I_C=10mA,I_{B1}=1mA			35	ns
Storage Time	t_s	V_{CC}=3V, I_C=10mA			200	ns
Fall Time	t_f	I_{B1}=I_{B2}=1mA			50	ns

CLASSIFICATION OF h_{FE1}

Rank	O	Y	G
Range	100-200	200-300	300-400

DEVICE CHARACTERISTICS

YS2N3904

Ic-Vce

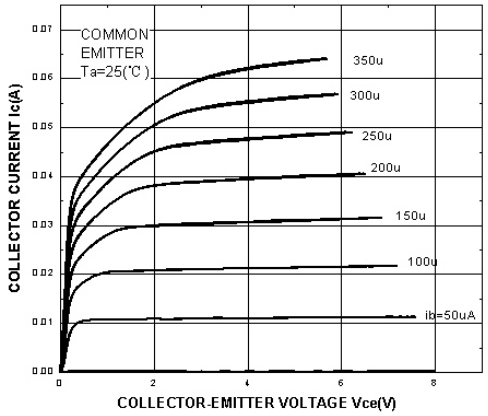

Vce-Ic

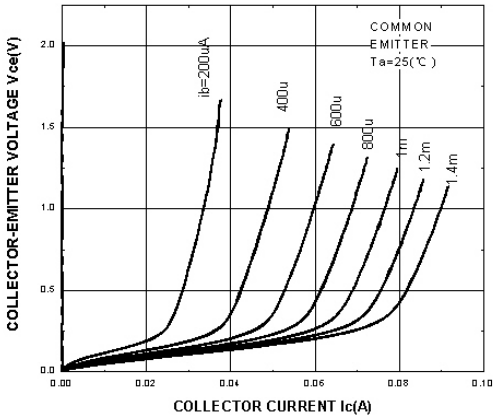

Vcesat-Ic
Vbesat-Ic

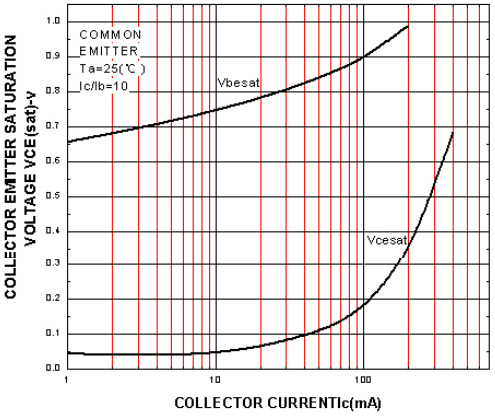

hFE-Ic

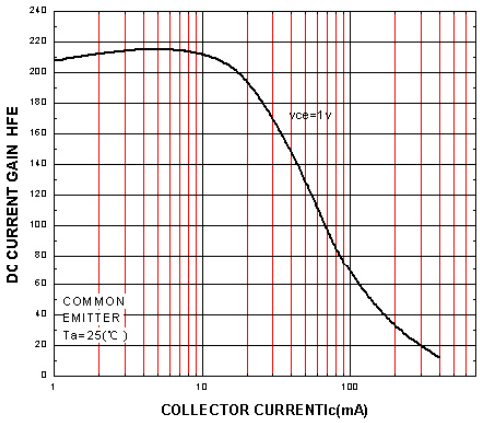

Pc-Ta

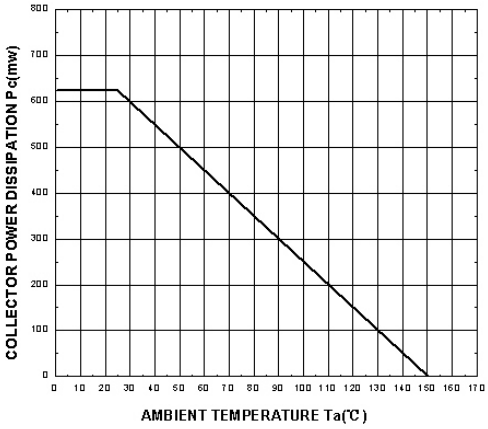

PACKAGE OUTLINE & DIMENSIONS

YS2N3904

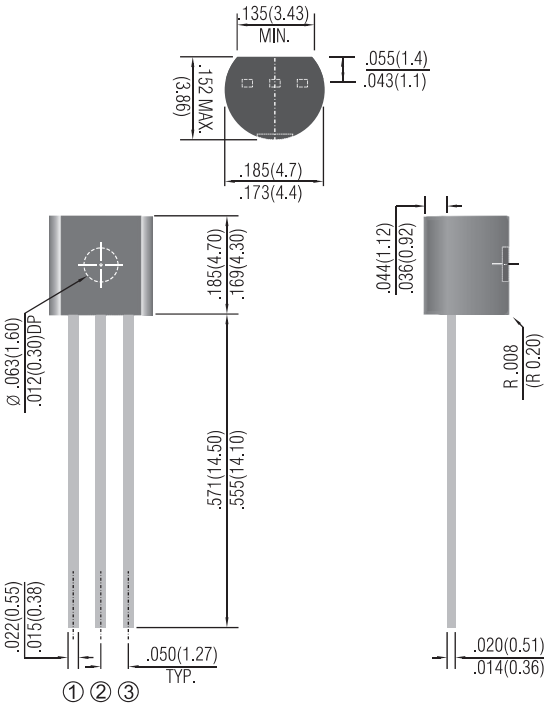

亞昕科技股份有限公司
Yea Shin Technology Co., Ltd.

TO-92 **Marking Information**

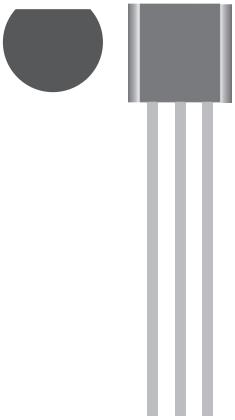

2N3904 : Divice Code

331： 產品識別碼

TO-92 PACKAGE TAPEING DIMENSION

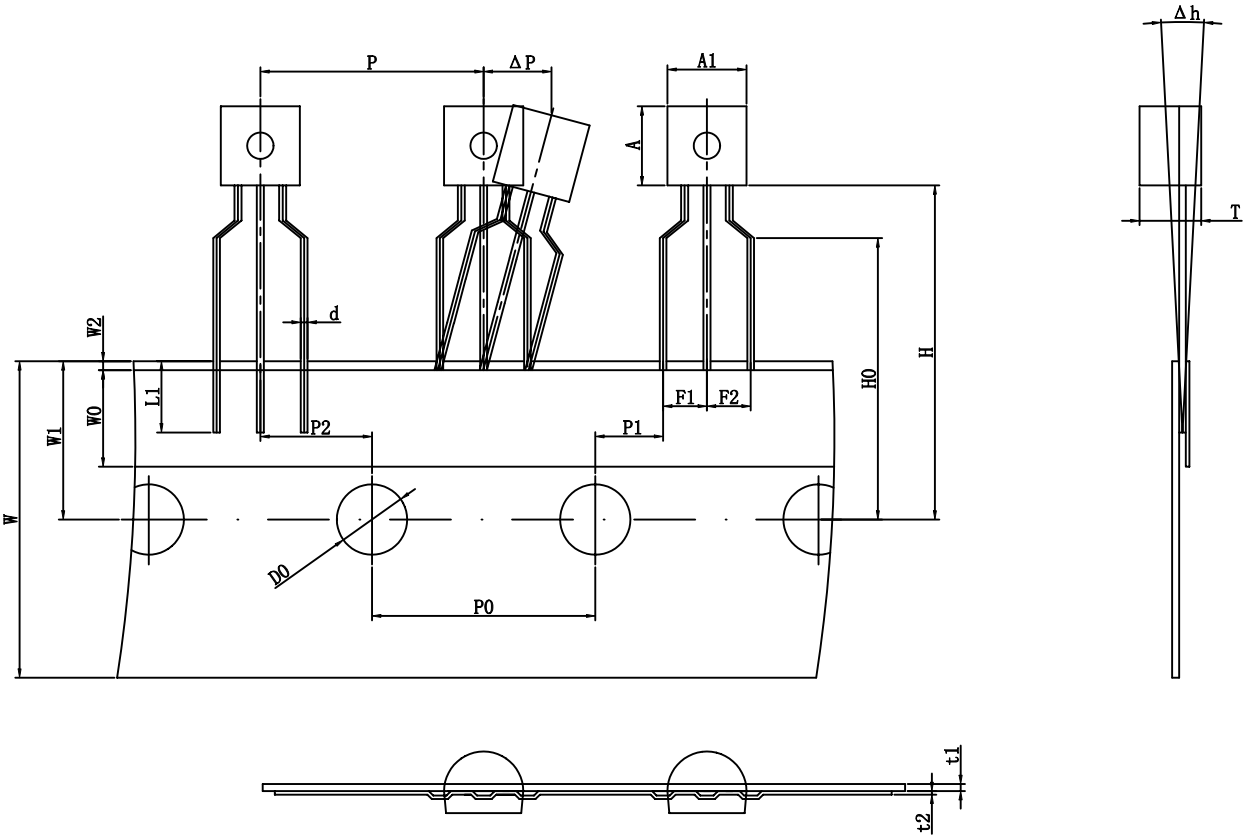

Item	Symbol	Value & Tolerance
Body width	A1	4.5 ± 0.1
Body height	A	4.5 ± 0.1
Body thickness	T	3.5 ± 0.1
Lead wire diameter	d	0.38 ± 0.02
Pitch of component	P	12.7 ± 0.3
Feed hole pitch	P0	12.7 ± 0.2
Hole center to component center	P2	6.35 ± 0.3
Lead to lead distance	F1,F2	2.5 ± 0.3
Component alignment, F-R	△h	0 ± 1.0
Type width	W	18.0 + 1.0, - 0.5
Hole down tape width	W0	6.0 ± 0.5
Hole position	W1	9.0 ± 0.5
Hole down tape position	W2	1.0 MAX
Height of component from tape center	H	19.0 +2.0, -0
Lead wire clinch height	H0	16.0 ± 0.5
Lead wire(tape portion)	L1	2.5 MIN
Feed hole diameter	D0	4.0 ± 0.2
Taped Lead Thickness	t1	0.4 ± 0.05
Carrier Tape Thickness	t2	0.2 ± 0.05
Position of hole	P1	3.85 ± 0.3
Component alignment	△P	0 ± 1.0

Unit : mm