YEA SHIN TECHNOLOGY CO., LTD

MMBD7000

Dual Switching Diode

- Fast Switching Speed
- For General Purpose Switching Applictions
- High Conductance
- Low Current Leakage
- Small Outline Surface Mount Package
- RoHS compliant / Green EMC

SOT–23

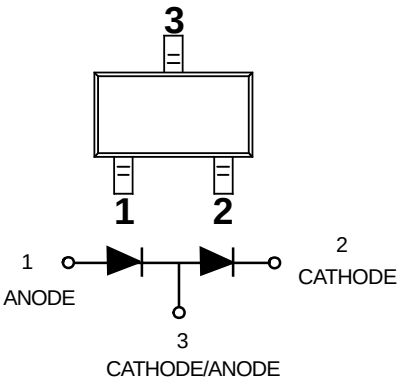

MAXIMUM RATINGS(EACH DIODE)

Rating	Symbol	Value	Unit
Reverse Voltage	V_R	100	Vdc
Forward Current	I_F	200	mAdc
Peak Forward Surge Current	$I_{FM(surge)}$	500	mAdc

THERMAL CHARACTERISTICS

Characteristic	Symbol	Max	Unit
Total Device Dissipation FR– 5 Board [1]	P_D	225	mW
T_A = 25°C			
Derate above 25°C		1.8	mW/°C
Thermal Resistance, Junction to Ambient	$R_{\theta JA}$	556	°C/W
Junction and Storage Temperature	T_J, T_{stg}	–55 to +150	°C

DEVICE MARKING

MMBD7000 = M5C

ORDERING INFORMATION

Device	Package	Shipping
MMBD7000	SOT–23	3000/Tape & Reel

ELECTRICAL CHARACTERISTICS (T_A = 25°C unless otherwise noted)(EACH DIODE)

Characteristic	Symbol	Min	Max	Unit
OFF CHARACTERISTICS				
Reverse Breakdown Voltage ($I_{(BR)}$ = 100 µAdc)	$V_{(BR)}$	100	—	Vdc
Reverse Voltage Leakage Current				µAdc
(V_R = 50 Vdc)	I_R	—	1.0	
(V_R = 100 Vdc)	I_{R2}	—	3.0	
(V_R = 50 Vdc,125°C)	I_{R3}	—	100	
Forward Voltage	V_F			Vdc
(I_F = 10 mAdc)		—	0.855	
(I_F = 100 mAdc)		—	1.1	
Reverse Recovery Time (I_F = I_R = 10 mAdc) (Figure 1)	t_{rr}	—	4.0	ns
Capacitance(V_R=0V)	Ct	—	2.0	pF

1. FR–5 = 1.0 x 0.75 x 0.062 in.

DEVICE CHARACTERISTICS

MMBD7000

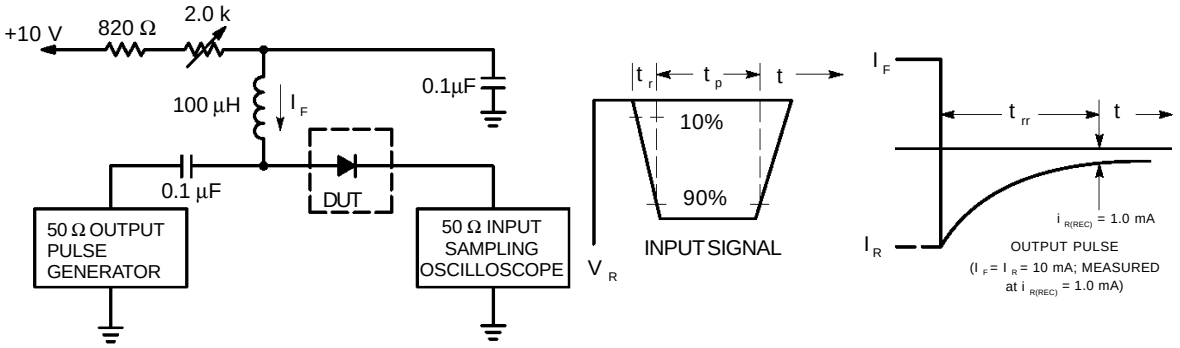

Notes: 1. A 2.0 kΩ variable resistor adjusted for a Forward Current (I_F) of 10mA.

2. Input pulse is adjusted so $I_{R(peak)}$ is equal to 10mA.

3. $t_p \gg t_{rr}$

Figure 1. Recovery Time Equivalent Test Circuit

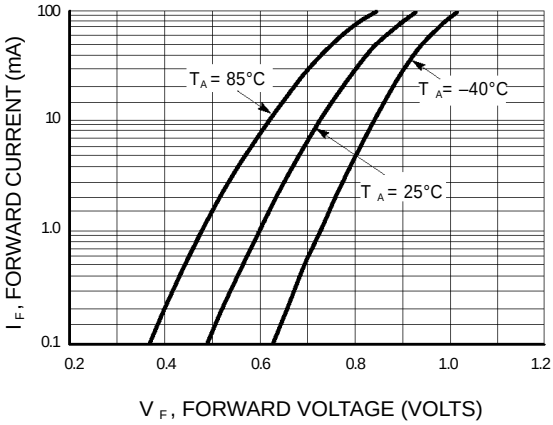

Figure 2. Forward Voltage

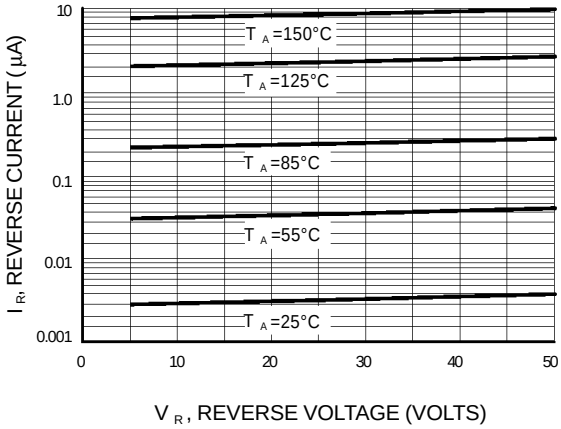

Figure 3. Leakage Current

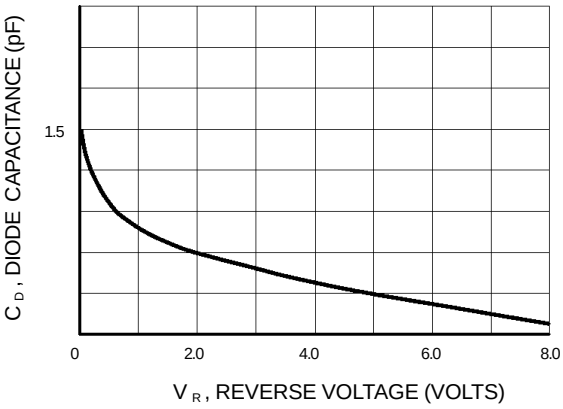

Figure 4. Capacitance

PACKAGE OUTLINE & DIMENSIONS

MMBD7000

SOT-23

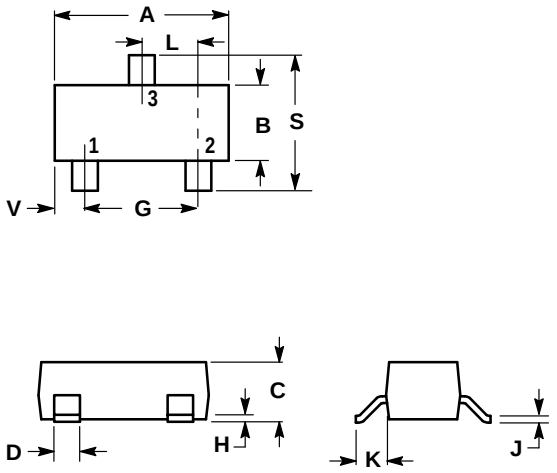

NOTES:

1. DIMENSIONING AND TOLERANCING PER ANSI Y14.5M, 1982.
2. CONTROLLING DIMENSION: INCH.

DIM	INCHES		MILLIMETERS	
	MIN	MAX	MIN	MAX
A	0.1102	0.1197	2.80	3.04
B	0.0472	0.0551	1.20	1.40
C	0.0350	0.0440	0.89	1.11
D	0.0150	0.0200	0.37	0.50
G	0.0701	0.0807	1.78	2.04
H	0.0005	0.0040	0.013	0.100
J	0.0034	0.0070	0.085	0.177
K	0.0140	0.0285	0.35	0.69
L	0.0350	0.0401	0.89	1.02
S	0.0830	0.1039	2.10	2.64
V	0.0177	0.0236	0.45	0.60

PIN 1. ANODE
2. CATHODE
3. CATHODE/ANODE