YEA SHIN TECHNOLOGY CO., LTD

BAT140

1A SURFACE MOUNT SCHOTTKY BARRIER RECTIFIER

Features

- Very Low Forward Voltage Drop
- High Conductance
- For Use in DC-DC Converter, PCMCIA, and Mobile Telecommunications Applications
- Pb free product at available : 99% Sn above meet RoHS environment

SOT– 23

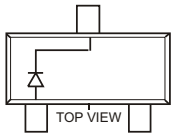

Mechanical Data

- Case: SOT-23
- Case Material: Molded Plastic. UL Flammability Classification Rating 94V-0
- Moisture Sensitivity: Level 1 per J-STD-020C
- Terminals: Solderable per MIL-STD-202, Method 208
- Lead Free Plating (Matte Tin Finish annealed over Alloy 42 leadframe).
- Polarity: See Diagram
- Marking: T14
- Weight: 0.008 grams (approximate)

Maximum Ratings @ T_A = 25°C unless otherwise specified

Characteristic	Symbol	Value	Unit
Peak Repetitive Reverse Voltage Working Peak Reverse Voltage DC Blocking Voltage	V_{RRM} V_{RWM} V_R	40	V
RMS Reverse Voltage	$V_{R(RMS)}$	28	V
Average Rectified Current	I_O	1.0	A
Non-Repetitive Peak Forward Surge Current 8.3ms Single half sine-wave superimposed on rated load	I_{FSM}	5.5	A
Power Dissipation	P_d	500	mW
Typical Thermal Resistance, Junction to Ambient Air	$R_{\theta JA}$	200	°C/W
Operating Temperature Range	T_j	-40 to +125	°C
Storage Temperature Range	T_{STG}	-40 to +150	°C

Electrical Characteristics @ T_A = 25°C unless otherwise specified

Characteristic	Symbol	Min	Typ	Max	Unit	Test Condition
Reverse Breakdown Voltage	$V_{(BR)R}$	40	—	—	V	I_R = 300uA
Forward Voltage	V_F	—	500	550	mV	I_F = 1000mA
Reverse Current	I_R	—	—	100	μA	V_R = 30V
Total Capacitance	C_T	— —	175 25	— —	pF pF	V_R = 0V, f = 1.0MHz V_R = 25V, f = 1.0MHz

DEVICE CHARACTERISTICS

BAT140

Electrical characteristic curves(T_A = 25°C)

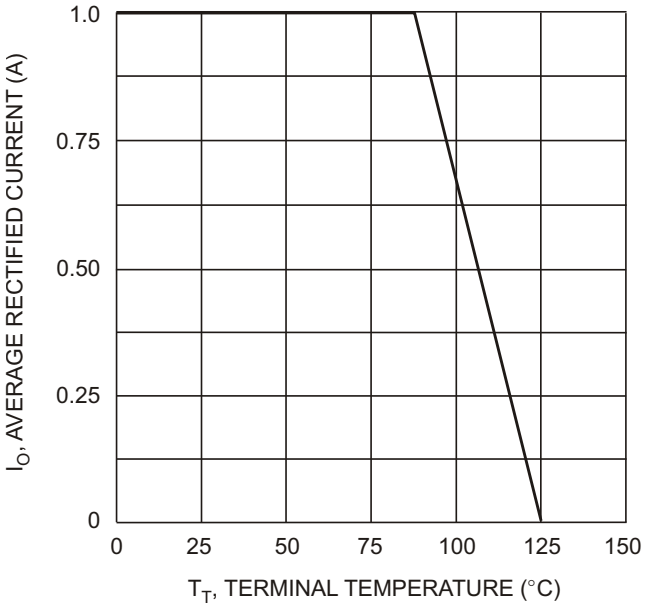

Fig. 1 Forward Current Derating Curve

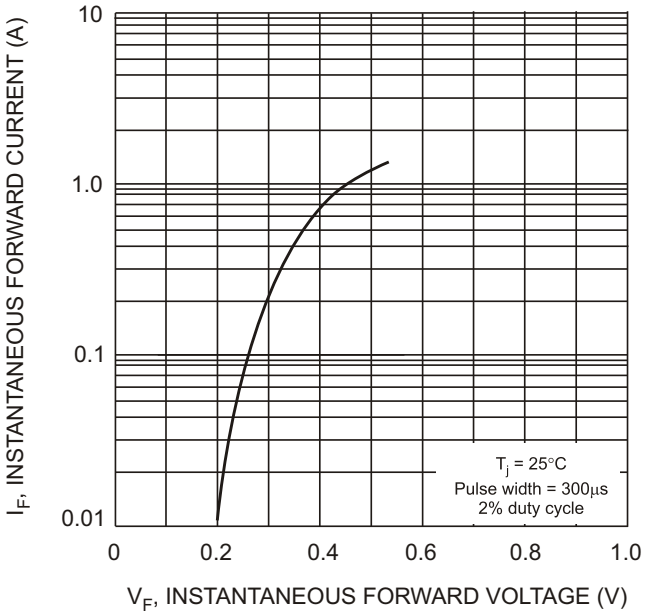

Fig. 2 Typical Forward Characteristics

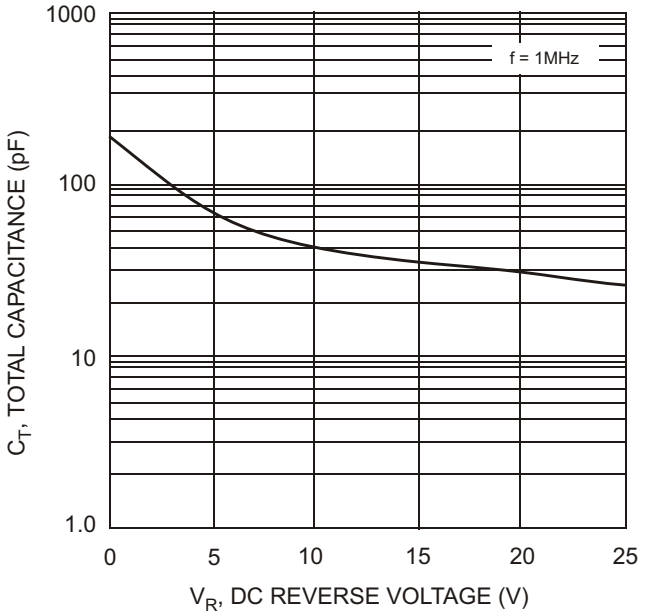

Fig. 3 Typ. Total Capacitance vs Reverse Voltage

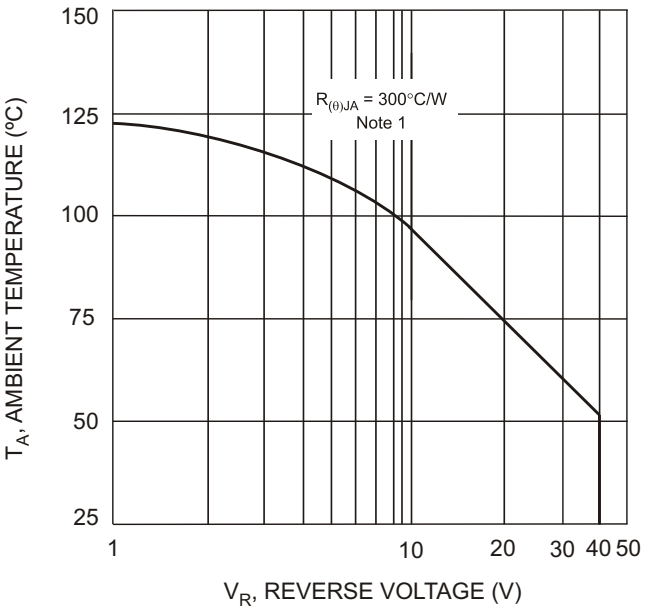

Fig. 4 Typical Safe Operating Area

Note: 1. Assumed application thermal conditions.
$R_{\theta JA}$ varies depending on application.

PACKAGE OUTLINE AND DIMENSIONS

BAT140

PACKAGE AND SUGGESTED PAD LAYOUT DIMENSION

SOT-23

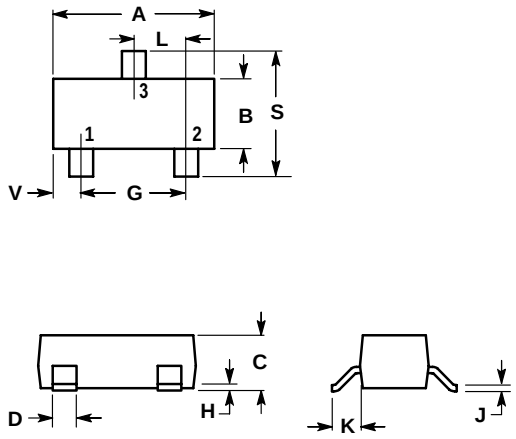

NOTES:

1. DIMENSIONING AND TOLERANCING PER ANSI Y14.5M, 1982.
2. CONTROLLING DIMENSION: INCH.

DIM	INCHES		MILLIMETERS	
	MIN	MAX	MIN	MAX
A	0.1102	0.1197	2.80	3.04
B	0.0472	0.0551	1.20	1.40
C	0.0350	0.0440	0.89	1.11
D	0.0150	0.0200	0.37	0.50
G	0.0701	0.0807	1.78	2.04
H	0.0005	0.0040	0.013	0.100
J	0.0034	0.0070	0.085	0.177
K	0.0140	0.0285	0.35	0.69
L	0.0350	0.0401	0.89	1.02
S	0.0830	0.1039	2.10	2.64
V	0.0177	0.0236	0.45	0.60

Controlling dimensions are in millimeters